VOLUME 1 PENDANT

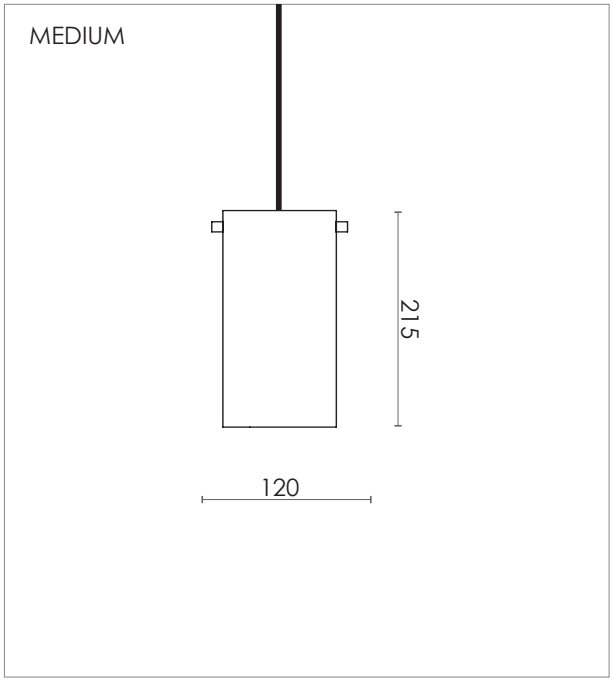

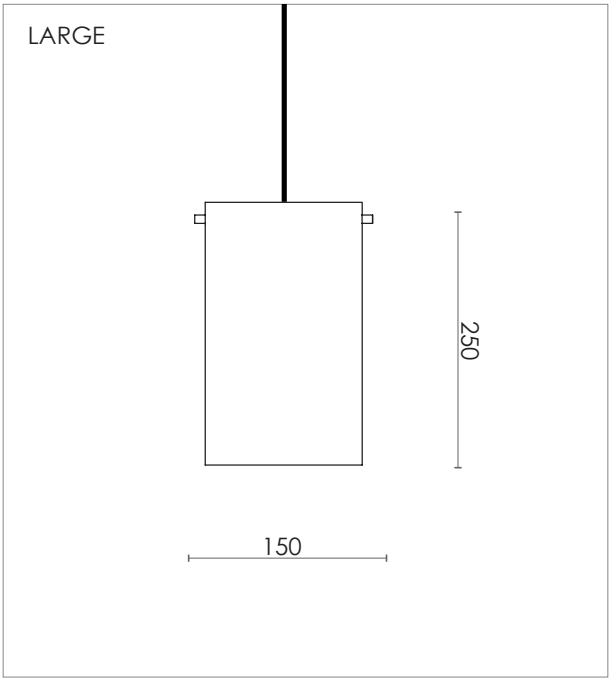

DESIGN SPECIFICATIONS

DIMENSIONS (mm)	W Ø120 x H 215 W Ø150 x H 250
WEIGHT (kg)	0,35 / 0,4
MATERIALS	THE LAMP IS MADE FROM CLEAR LACQURED BRASS, STEEL OR POWDER COATED STEEL
CORD (mm)	BLACK TEXTILE - L 3900
ENVIRONMENT	INDOOR
DESIGN BY	NICLAS HOFLIN
DESIGN YEAR	2012

ELECTRICAL SPECIFICATIONS

SWITCH	NO
BULB HOLDER	E27
LIGHT SOURCE	INCLUDED DIMMABLE 7 W LED - 2700K
DIMMABLE	YES
MAX (W)	7 W LED
VOLTAGE	230 / 240
CLASS	1
IP	20

COLOURS

BLACK / BRASS	**MEDIUM** ART.NO. 411571005	**LARGE** ART.NO. 411572005
SLATE GREY / BRASS	**MEDIUM** ART.NO. 411571025	**LARGE** ART.NO. 411572025
UMBRA GREY / BRASS	**MEDIUM** ART.NO. 411571026	**LARGE** ART.NO. 411572026
SOIL GREY/ BRASS	**MEDIUM** ART.NO. 411571030	**LARGE** ART.NO. 411572030
WHITE / BRASS	**MEDIUM** ART.NO. 411571202	**LARGE** ART.NO. 411572202

Rubn®