ANGEL 3 1000 CHANDELIER

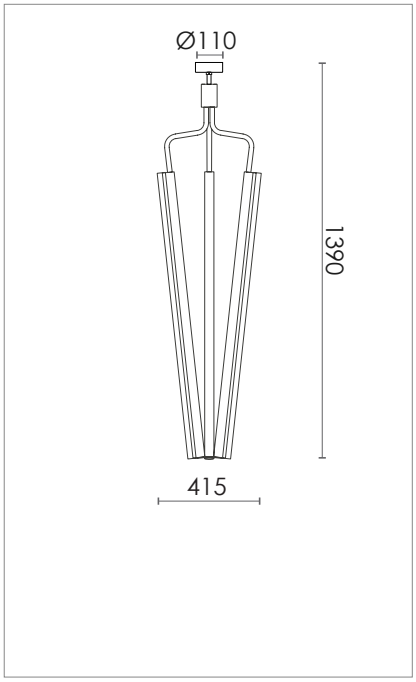

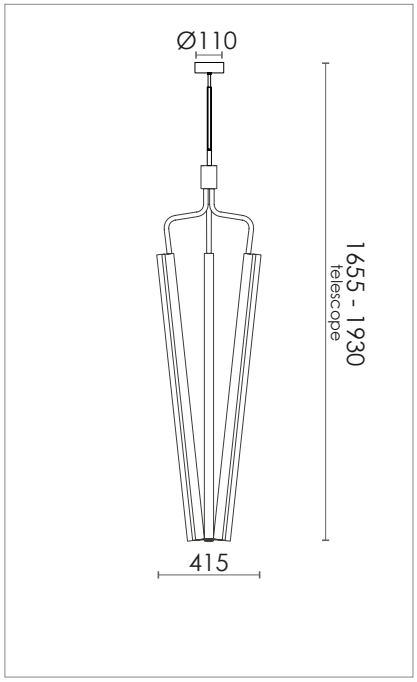

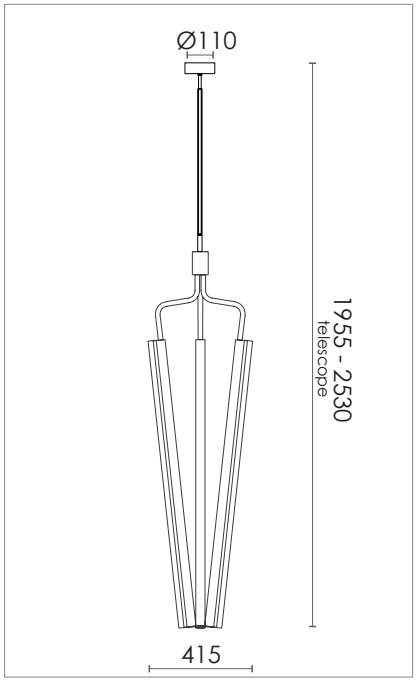

DESIGN SPECIFICATIONS

DIMENSIONS (mm)	W 415 x H 1390 W 415 x H 1655-1930 W 415 x H 1955-2530
WEIGHT (kg)	- / - / -
MATERIALS	THE LAMP IS MADE FROM CLEAR LACQURED BRASS, STEEL OR POWDER COATED STEEL.
CORD (mm)	NO
ENVIRONMENT	INDOOR
DESIGN BY	NICLAS HOFLIN
DESIGN YEAR	2019

ELECTRICAL SPECIFICATIONS

SWITCH	NO
BULB HOLDER	S14S
LIGHT SOURCE	INCLUDED 3 X 15 W DIMMABLE LED - 2700 K
DIMMABLE	YES
MAX (W)	45 W LED
VOLTAGE	230 / 240
CLASS	1
IP	20

COLOURS

BLACK	**H 1390** ART.NO. 913201005	**H 1655-1930** ART.NO. 913202005	**H 1955-2530** ART.NO. 913203005
BRASS	**H 1390** ART.NO. 913201001	**H 1655-1930** ART.NO. 913202001	**H 1955-2530** ART.NO. 913203001
BRONZE-COLOR	**H 1390** ART.NO. 913201223	**H 1655-1930** ART.NO. 913202223	**H 1955-2530** ART.NO. 913203223
STEEL	**H 1390** ART.NO. 913201500	**H 1655-1930** ART.NO. 913202500	**H 1955-2530** ART.NO. 913203500

Rubn