Rubn®

DESIGN NICLAS HOFLIN

INSTALLATION INSTRUCTION

VOLUME 2 WALL SMALL

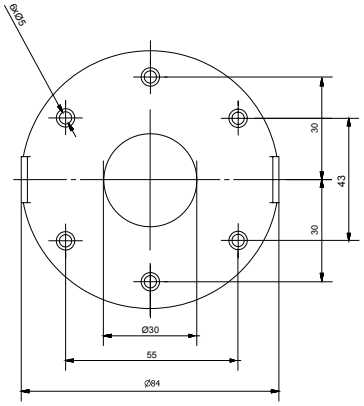

1. Attach wall plate by using 4 screws (included)
Make sure that the plate is mounted straight.
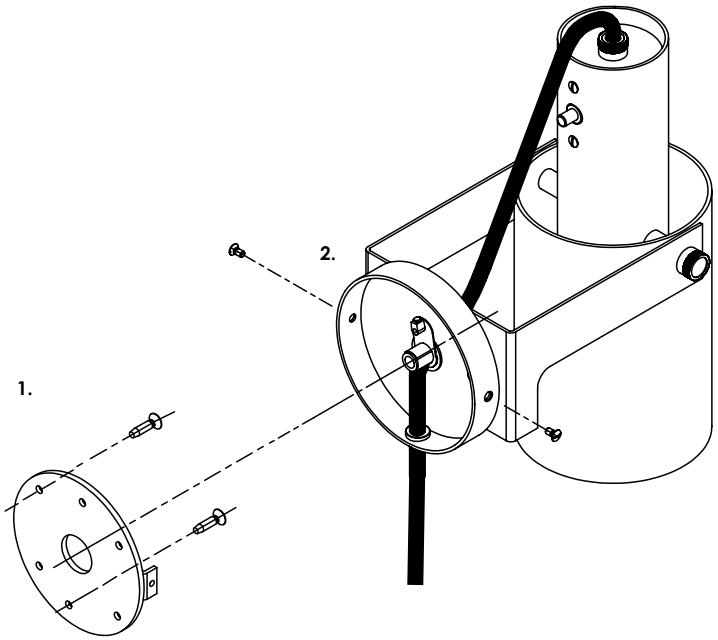
2. Attach wall cup to wall plate by using 2 screws (included)